Battery Management System in Electric Vehicle

Ananthraj C R
Electrical Engineering Department,
National Institute of Technology
Rourkela, India
rajuananthraj@gmail.com

Arnab Ghosh, *Senior Member, IEEE*
Electrical Engineering Department,
National Institute of Technology
Rourkela, India
aghosh.ee@gmail.com

2021 4th Biennial International Conference on Nascent Technologies in Engineering (ICNTE) | 978-1-7281-9061-7/21/$31.00 ©2021 IEEE | DOI: 10.1109/ICNTE51185.2021.9487762

***Abstract*—Battery storage forms the most important part of any electric vehicle (EV) as it store the necessary energy for the operation of EV. So, in order to extract the maximum output of a battery and to ensure its safe operation it is necessary that a efficient battery management system exist i the same. It monitors the parameters, determine SOC, and provide necessary services to ensure safe operation of battery. Hence BMS form a important part of any electric vehicle and so, more and more research are still being conducted in the field to develop more competent Battery Management System.**

***Index Terms*—SOC(State of Charge), EV (Electric Vehicle), BMS (Battery Management System)**

I. Introduction

Electric vehicles are the future of transport. The growing market of EV (Electric Vehicles) and declining petroleum fuels makes it a necessity to develop more efficient EVs. Batteries form the primary storage device in an EV[4], [5], [7]. A Battery management system forms a very important part of any EV [1], [2], [3], [6]. It comprises of various electrical and electronic circuits (including various converter and inverter circuits) programmed to monitor and extract the maximum output from a battery system [11], [12], [13], [14]. The performance of the battery is dependent on the chemical reactions. As chemicals degrade so does the performance of battery. And so it is necessary to constantly monitor these aspects of a battery. SOC forms an important prospect of any battery to ensure the safe charge and discharge of any battery. SOC is defined as the current capacity of a battery expressed in terms of its rated capacity[8], [9]. BMS forms a separate entity with hardware and software and it is not incorporated to the charger[15], [16], [17]. The sensors in BMS monitor the cell conditions and these in turn are used to calculate the SOC and perform various actions[18], [19], [20]. Since battery forms the most important of them all proper modelling of battery storage is also important.

II. Block Diagram of Battery Management System(BMS)

Battery Management system may vary according to the system employed and algorithms used [3], [4]. A basic BMS system is given below.

A. Measurement Block

The main function is to capture cell voltages, currents, temperatures and ambient temperature and other necessary data. Measured values are then converted to digital signals for processing. The cost of employing sensors at a cell level is high but, it is advantageous as it can provide cell balancing at the lowest level.

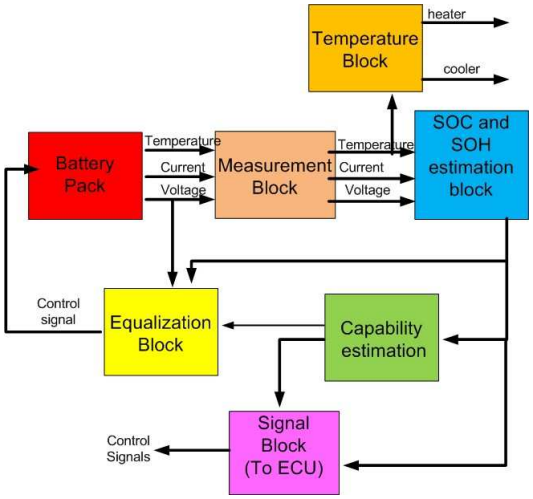

Fig. 1. Block diagram of a Battery Management System

B. Battery algorithm block

Its primary function is to calculate SOC (State of Charge) and SOH (State of Health) using the data from measurement block. State of charge(SOC) of a battery is the current capacity of a battery expressed in terms of its total rated capacity [8], [9].SOC acts as a fuel gauge as it can be used to determine the remaining distance that can be covered by EV. SOC also varies with temperature and charge and discharge cycles. So the algorithm used should also take these factors into consideration. SOC estimation also helps to avoid the risk of overcharge and undercharge. Cells may get overcharged due to charge dumping caused by regenerative braking. In such cases BMS should monitor and control this to prevent damage to the battery. A common method of SOC calculation is direct measurement, i.e., by measuring open circuit voltage (OCV) and deducing SOC from pre-stored discharge characteristics. But this method does not consider the temperature effect into consideration. So it is important to employ a method which take into consideration of these effects.

978-1-7281-9061-7/21/$31.00 ©2021 IEEE

Authorized licensed use limited to: University of Saskatchewan. Downloaded on August 10,2021 at 09:08:20 UTC from IEEE Xplore. Restrictions apply.

C. Capability estimation block

This block determines the maximum charge and discharge current at any instance from the SOC and SOH values. The output is then provided to the ECU(Electronic Control Unit). Thus the BMS is able to control the charging and discharging of the battery and take other measurements for the protection of the battery as well.

D. Cell equalization block

All cells are not ideal and hence characteristics of cells will have variations in them. So even when charging the level at which they are charged may vary from cell to cell. The main function of this module is to balance the cell voltages/SOC so that the system is not damaged. It compares different cell voltages/SOC and find the differences .If it appear to be more than a pre-set threshold value, then the charging is halted and cells are equalized either by cell dissipative equalization or active equalization. In dissipative equalization the cells with higher SOC are discharged until their values are equal. In active cell balancing the cells are charged through a separate charger or from the high voltage cells to make them equal. Active balancing provide a superior solution but is cost inhibiting. In this technique, if a cell is in under-voltage condition the other cells are used to charge this cell by using an algorithm so that energy wastage is reduced which occur in dissipative cell equalisation.

E. Thermal management block

It monitor the cell temperatures so that the cells are not damaged in operation[1]. The output is given to a cooling system and heating system and which collectively work towards maintaining the temperature at safe operation limits. It also sends a control signal to the Electronic Control Unit (ECU) in case of abnormal temperature rise as it can lead to permanent damage to batteries and also can harm the user.

III. Battery used in EVs

Most common type of batteries used are Nickel-Cadmium,Lead-acid, Nickel-Metal-Hydride and Lithium-ion [4]. Comparison in battery dynamics and other characteristics are essential to understand which type of battery is suitable for a system.

A. Li-Ion battery

Negative electrode (cathode) of this type of cell is formed by lithiated metal oxide, composed of copper collectors on the face of which is deposited, the active material, anode is made of graphitic carbon with a layered structure, a polyethylene separator avoid the contact with positive electrode consisting of aluminium current collector coated material active lithium insertion . The nominal voltage is 3.7V and specific energy is 80 Wh/kg. Common applications are in phones and laptops.

B. Lead-Acid battery

Negative electrode formed of metal lead , positive electrode of lead oxide and separators used to obstruct flow of ions between plates increase internal resistance.An advantage of this battery is that it can operate over a wide temperature range. Other advantage include easy installation.Mainly find its use in hospital equipment, wheel chair etc.

C. Nickel-Cadmium battery

Positive electrode is nickel hydroxide(NiOOH) ,negative electrode is metallic cadmium and the electrolyte being potassium hydroxide(KOH) Specific energy is 40-60 Wh/kg. They can supply extremely high currents and can be charged rapidly. They offer a long life thereby ensure a high degree of economy. The main applications include radios, bio-medical equipments, professional video cameras and power tools. An added disadvantage of this battery is the presence of toxic metals making it environment unfriendly.

D. Nickel Metal Hydride battery

Chemical reaction at positive electrode is same as that of nickel-cadmium cell because both use nickel oxide-hydroxide. But the negative electrode use a hydrogen absorbing alloy instead of cadmium. NiMH batteries have a higher energy density per volume and weight when compared to that of NiCd battery.It contains no toxic metal which add to the advantage of such batteries. The main applications are mobile batteries and laptops.

The most apt battery to be used in Electric Vehicle, based on research is Lithium-ion battery justified by the following features.

- Good autonomy -This batteries seem to double the autonomy of electric vehicle.
- Longer lifespan -They offer more life cycles when compared to other batteries, means they last long than other types of battery.
- Compact and increased load capacity -They are much lighter when compared to equivalent batteries. So vehicles have a greater effective capacity and vehicle weight is decreased and increase in overall effective capacity.

IV. Issues and Challenges of Li-Ion Battery

Li-ion batteries have many advantages but added to those these cells face some challenges as well. These challenges faced by Li-Ion batteries include the protection circuitry employed, cost of the battery, memory effect of partially discharged cells, environment impact and recycling.

A. Temperature

Chemical reactions produce heat in batteries. Unusual temperature rise or drop damage the chemical property of cells and can lead to explosion in worst cases. A effective temperature mechanism is hence mandatory. Higher temperatures of batteries can cause abnormal behavior and lower temperature can affect the charging and discharging currents of the battery, which can also affect the power handling ability of the battery, cause due to the decreased rate of chemical reaction.

Authorized licensed use limited to: University of Saskatchewan. Downloaded on August 10,2021 at 09:08:20 UTC from IEEE Xplore. Restrictions apply.

B. Memory Effect

Memory effect arises when battery is partially discharged and repeatedly charged in an irregular manner for many charge and discharge cycles. Thus, the battery will be able to hold less charge in them. This can occur in EVs due to the braking operation. The battery is charged partially when breaking and suddenly discharged when the car accelerates. This partial charge and discharge cycles can lead to memory effect in battery storage system in EVs.

C. Cost

Cost of lithium was high and thus the batteries were also costly. But the increased application, rising demand and large scale production lead to the decreased price. The price of Li-ion battery pack comprises to 25%- 30% of the price of an electric car, which clearly shows why this cost has to come down even more.

D. Recycling

The Li-ion batteries are a promising solution to the future transportation. But a negative impact of the same is the presence of lethal substance , if thrown away cause personal end environmental damage. A solution to this problem is by recycling used batteries and reducing the impact on environment.

V. SUPER-CAPACITORS:AN ALTERNATE ELECTRICAL STORAGE

Li-ion batteries lose their efficiency after some years and some of the materials used are hazardous and even banned in some countries. The supercapacitors (Electrochemical Double Layer Capacitors-ELDC) [5] provide a promising alternative to the conventional batteries. A supercapacitor operation is similar to any conventional capacitor. The difference between a capacitor and a supercapacitor is in the charge accumulation mode. In supercapacitors the charge accumulates at the interface between conductor surface and electrolyte solution but in classical capacitors the charge is accumulated on the two armatures.

Advantage of supercapacitors:

- Absence of polluting materials.
- Able to store electrical charge in large quantities.
- The lifespan of EDLCs are very long(¿10^6). The internal resistance is a very small value and thus they allow charging and discharging in large values of currents (hundreds of ampere)
- Decrease in weight of the system.

A. Parameters of Electro-Chemical Double Layer Capacitor

1) Maximum Breakthrough Voltage:
   This voltage is relatively small in an EDLC(2.5V). This low value posses a problem when there is a need to work at high voltages. EV require these to work at voltages of 14V and so. and hence we have to use series and parallel combination of the capacitors which result in effective change in capacitance values. For series connections Capacitance value is changed. And to increase capacitance we need to connect more capacitors in parallel but the voltage will remain same in this case limited to that of a single capacitor.
2) Maximum Current Drawn:
   This parameter of EDLC is clearly superior than other storage devices as it can reach a range of 10^3A unlike other conventional storage devices which can reach up to only 10^2A.
3) Self Discharge Current:
   Self discharge current of EDLC depend on mainly temperature. At low temperatures the self discharge current is very low for an EDLC. But at temperatures greater than 80 ºC the leakage current is high enough that after 48 hours half of the load will be lost. This makes EDLC less suitable to be used independently but at high temperatures they can be used along with other storage devices that can perform better at those temperatures.

B. Conclusions

The research in this field of supercapacitors can be summarised by the following conclusions:

1) Capacity does vary much with temperature but not significantly. So the effect of temperature is minimal on capacity.
2) There exist a relation between the temperature and series resistance of supercapacitor. As temperature is increased the resistance is also found to increase at higher temperatures.
3) The most challenging factor inhibiting further research in this field is the task of identifying a suitable equivalent circuit, The lack of references on electrochemical supercapacitors, especially for high capacitance values, pose a challenge.
4) The super capacitor is a viable solution to be used in a hybrid system
5) The super capacitor used for short-term storage of deceleration energy on a vehicle that is later transferred to traction engine power by commutated power has the advantage of reducing the wear of the battery by very large number of charge cycles, as well as full recovery of energy produced by electric motor at braking.
6) In hybrid electrical vehicles high braking charge is required. In such cases supercapacitor/battery hybrid can be used because batteries alone cannot store large amount of energies in short time.

VI. LI-ION BATTERY MODEL

The Equivalent circuit model[10] shown in fig.2 is used to model the battery in simulink. The proposed model is different from conventional equivalent circuit models. Unlike in conventional models the Rd is modelled as a non-linear resistance which depends on SOC of the battery. The concept of non-linear transfer resistance is used to improve the performance of the conventional model. Conventional models use constant RC networks. These RC networks work only

Authorized licensed use limited to: University of Saskatchewan. Downloaded on August 10,2021 at 09:08:20 UTC from IEEE Xplore. Restrictions apply.

for certain voltages and temperatures and is a drawback of conventional models. Thus the concept of non-linear resistance increase the accuracy of this model. Temperature and self- discharge effects are neglected for simplicity. At the same time, in order to improve the battery model, the relaxation effect can be modelled by adding a second parallel RC network in series with existing one.

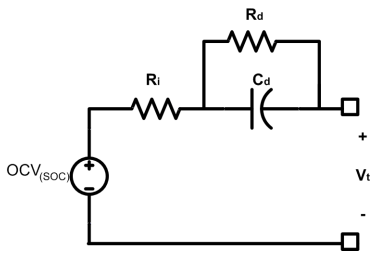

Fig. 2. Equivalent Battery Circuit Model

OCV is the open circuit voltage of the system. Ri is the internal resistance Rd and Cd are the RC parallel circuit used to describe the transient response characteristic of the battery. Rd is the transfer resistance and Cd is the double layer capacitance.

A. Parameter extraction from Battery

Parameter extraction is an important part in battery modelling. This helps to identify the characteristic of the battery employed. The parameter extracted is used to form the lookup tables for the simulink model so that the model formed is close to a real physical battery. Varying SOC and current is used to extract how the battery is behaving at each condition. Parameter extraction is achieved using constant discharge test and current pulse test. In current pulse test, battery is discharged with a constant current for a certain period so that SOC drops to predicted level. Relationship between OCV and SOC can be obtained from the voltage response. OCV is the terminal voltage of the battery when the battery is in equilibrium state, i.e, no chemical reaction in the battery. The OCV(SOC)-SOC relationship is profiled and plotted. The function of OCV(SOC) also can be obtained by using a polynomial trend line which fit the OCV(SOC)-SOC curve. Also the OCV(SOC)-SOC curve can be fit by a 5th order polynomial equation which fit the OCV(SOC)-SOC curve[17]. The function of OCV(SOC) is written as:

$$OCV = (3.82 \times 10^{-10})(SOC)^5 - (1.21 \times 10^{-7})(SOC)^4 + (1.51 \times 10^{-5})(SOC)^3 - (9.3 \times 10^{-4})(SOC)^2 + 0.0295(SOC) + 2.85 \quad (1)$$

Fig.3 shows the simulation circuit of the experiment used to extract the parameters of battery model. A controlled current source, which is controlled by a pulse generator will discharge the battery with 1C for 180 sec and then rest for 3420 sec.

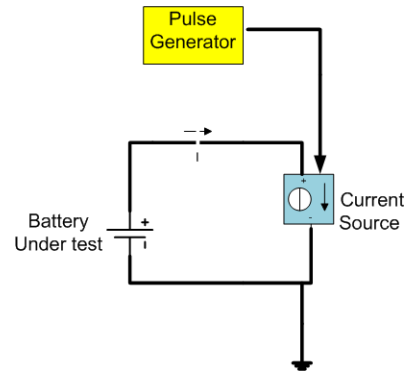

Fig. 3. Parameter Extraction Circuit for Li-Ion Battery

The parameter extraction from simulink model was also used to realize some of the lookup table values. The value of model parameters can be extracted from voltage response curve of Li-ion battery. The instantaneous voltage drop (ΔV) when the battery start to discharge is observed and a voltage rise when it stops discharging. The voltage response shows the existence of the internal resistance, Ri using equation

$$Ri = \frac{\Delta V}{\Delta I} \quad (2)$$

Value of usable capacity of battery can vary with battery current. A 1-D lookup table is used to determine the value of usable capacity from current value.

Continuous discharge test (CDT) is method which is used to identify the rate capacity effect of battery. The usable capacity is found to be lower than the actual capacity. After extraction of parameters a Simulink model of battery is designed with SOC calculation circuit.

VII. MATLAB-SIMULINK MODEL OF LI-ION BATTERY

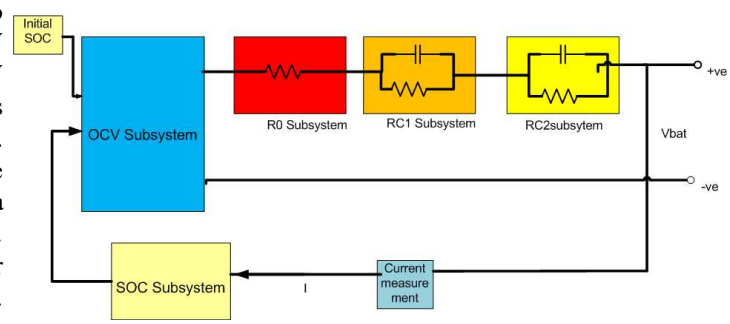

Fig. 4. Simulink Model of Li-Ion Battery

With reference to the equivalent circuit in fig.2 a simulation model was developed in simulink as shown in fig.5. The model comprises of 4 subsystems. Model consists of 4 subsystems. OCV(Open Circuit Voltage) subsystem, R0 subsystem, RC1 subsystem, RC2 subsystem. OCV subsystem is made of an dependent voltage source whose value is affected by SOC of the battery. R0 is the internal resistance of the battery employed by a variable resistance , value dependent on SOC

Authorized licensed use limited to: University of Saskatchewan. Downloaded on August 10,2021 at 09:08:20 UTC from IEEE Xplore. Restrictions apply.

and current discharged. SOC calculation block is also included in the OCV subsystem. Columb counting method of SOC estimation is used in this model. The following equation gives how it is realized:

$$SOC = SOC_0 + \int \frac{I}{C_C} dt \tag{3}$$

The non-linear relation between SOC and OCV is realized by a polynomial equation which fits the polynomial curve. Value of R0 is dependent on SOC and current. The transient response is realized using two RC models, RC1 and RC2. RC1 is constructed with short time constant response and RC2 with long time constant response. The two RC time constant provide a better trade off between accuracy and complexity as it keeps error within 1 mV. R0 subsystem calculate the drop caused by internal resistance. RC1 and RC2 represent transient response. The value of R and C is affected by current and SOC which is employed by a 2D lookup table for each.

A. SOC Calculation

SOC is the available capacity in battery and expressed by percentage of its usable capacity. That is one of the important parameter of a battery that should be determined for any BMS. SOC can be calculated accurately using the columb

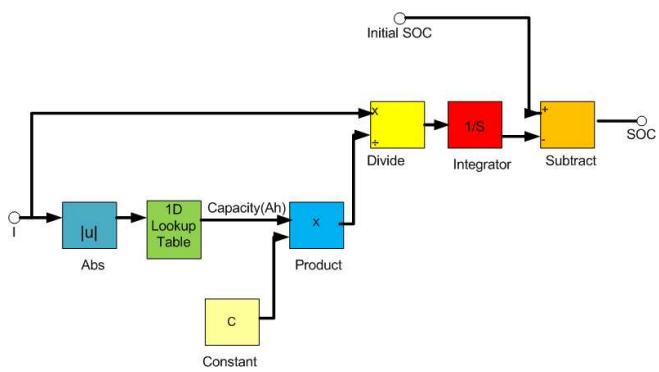

Fig. 5. SOC Calculation Block

counting method. The equation for the same is given in(3). The range of SOC varies from 0%(no charge) to 100%(full charge) according to this equation. The variation in usable capacity with battery current is employed using a 1D lookup table.

B. R0 Subsystem

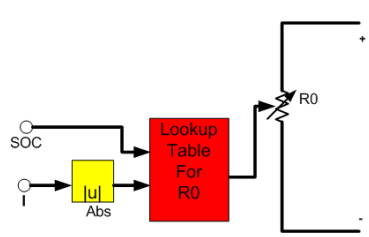

Fig. 6. R0 Subsystem

The internal resistance cause a voltage drop in batter which is realized in simulation using the R0 subsystem. The dependency of R0 on SOC and current is also employed. A variable resistor is used to transfer physical signal of resistance internal value.

C. Transient Response

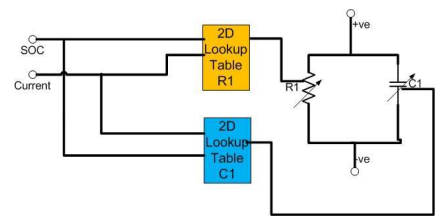

Fig. 7. RC1 Subsystem

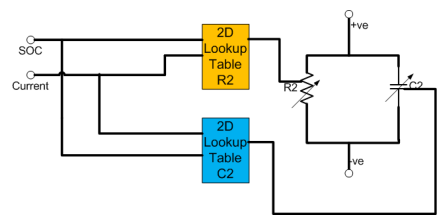

Fig. 8. RC2 Subsystem

The transient response is employed by two RC networks. RC1 is constructed with a short time constant and RC2 is employed with a long time constant.(fig.8 and fig.9 respectively) Look up tables are employed for both sub systems based on experimental data result and the more accurate values are extracted.

VIII. Model Validation

So far the model of a Li-Ion battery cell has been developed. The measurement block and SOC estimation block has been established with this model. The SOC calculation block employs the columb counting method. Continuous discharge test and current pulse test are applied for checking the characteristic of the battery to the physical battery system. In this paper, CDT for 4.5A (0.25C), 9A (0.5C) and 18A (1C) are conducted to identify the rate capacity effect of battery. The results of the tests are given below.

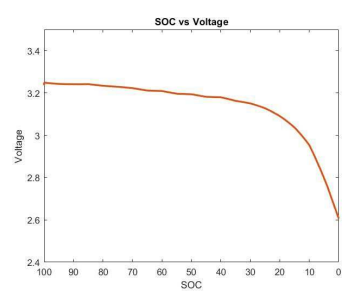

Fig. 9. SOC vs Terminal Voltage

Authorized licensed use limited to: University of Saskatchewan. Downloaded on August 10,2021 at 09:08:20 UTC from IEEE Xplore. Restrictions apply.

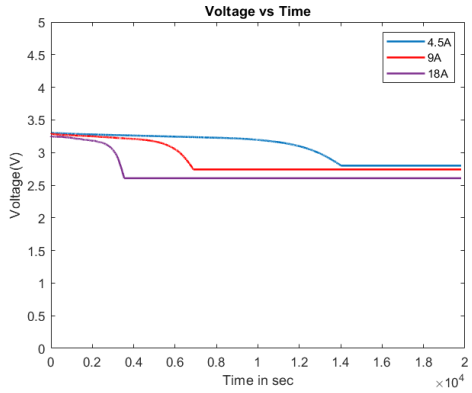

Fig. 10. Voltage vs Time for different current

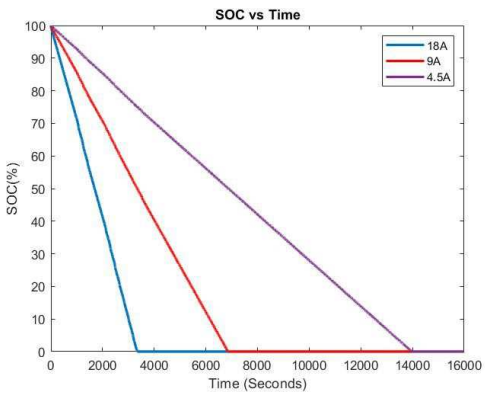

Fig. 11. SOC vs Time for different current

The simulation results show that the model developed has characteristics similar to a Li-Ion battery. The SOC calculation using Columb-Counting method produces satisfactory results.

IX. Conclusion

In this paper simulink battery model of a lithium-ion battery was formed. This model was formed in simulink and simscape using different mathematical and physical components. The model achieves the functions of data collection and SOC (State of Charge) calculation. SOC calculation employs columb counting method rather than conventional direct measurement using OCV (Open Circuit Voltage).The simulation results demonstrated the effectiveness of SOC calculation and battery response. Based on the above results further other BMS components will be developed in the next step.

References

[1] X. Kuang et al., ”Research on Control Strategy for a Battery Thermal Management System for Electric Vehicles Based on Secondary Loop Cooling,” in IEEE Access, vol. 8, pp. 73475-73493, 2020, doi: 10.1109/ACCESS.2020.2986814.

[2] K. Mansiri, S. Sukchai and C. Sirisamphanwong, ”Fuzzy Control Algorithm for Battery Storage and Demand Side Power Management for Economic Operation of the Smart Grid System at Naresuan University, Thailand,” in IEEE Access, vol. 6, pp. 32440-32449, 2018, doi: 10.1109/ACCESS.2018.2838581.

[3] M. A. Hannan, M. M. Hoque, A. Hussain, Y. Yusof and P. J. Ker, ”State-of-the-Art and Energy Management System of Lithium-Ion Bat- teries in Electric Vehicle Applications: Issues and Recommendations,” in IEEE Access, vol. 6, pp. 19362-19378, 2018, doi: 10.1109/ACCESS.2018.2817655.

[4] N. Mars, F. Krouz, F. Louar and L. Sbita, ”Comparison study of different dynamic battery model,” 2017 International Conference on Green Energy Conversion Systems (GECS), Hammamet, 2017, pp. 1-6, doi: 10.1109/GECS.2017.8066241.

[5] P. Svasta, R. Negroiu and A. Vasile, ”Supercapacitors — An alternative electrical energy storage device,” 2017 5th International Symposium on Electrical and Electronics Engineering (ISEEE), Galati, 2017, pp. 1-5, doi: 10.1109/ISEEE.2017.8170626.

[6] F. Zhu, G. Liu, C. Tao, K. Wang and K. Jiang, ”Battery management system for Li-ion battery,” in The Journal of Engineering, vol. 2017, no. 13, pp. 1437-1440, 2017, doi: 10.1049/joe.2017.0569.

[7] L. W. Yao, J. A. Aziz, P. Y. Kong and N. R. N. Idris, ”Modeling of lithium-ion battery using MATLAB/simulink,” IECON 2013 - 39th Annual Conference of the IEEE Industrial Electronics Society, Vienna, 2013, pp. 1729-1734, doi: 10.1109/IECON.2013.6699393.

[8] Z. Miao, L. Xu, V. R. Disfani and L. Fan, ”An SOC-Based Battery Management System for Microgrids,” in IEEE Transactions on Smart Grid, vol. 5, no. 2, pp. 966-973, March 2014, doi: 10.1109/TSG.2013.2279638

[9] K. W. E. Cheng, B. P. Divakar, H. Wu, K. Ding and H. F. Ho, ”Battery-Management System (BMS) and SOC Development for Electrical Vehicles,” in IEEE Transactions on Vehicular Technology, vol. 60, no. 1, pp. 76-88, Jan. 2011, doi: 10.1109/TVT.2010.2089647.

[10] M. D. Kharisma, M. Ridwan, A. F. Ilmiawan, F. Ario Nurman and S. Rizal, ”Modeling and Simulation of Lithium-Ion Battery Pack Using Modified Battery Cell Model,” 2019 6th International Conference on Electric Vehicular Technology (ICEVT), Bali, Indonesia, 2019, pp. 25-30, doi: 10.1109/ICEVT48285.2019.8994009.

[11] S. Patel, A. Ghosh, and P. K. Ray, ”Design of fractional order controller integrated with renewable resource in multi area islanded microgrid”, in 2020 IEEE International Conference on Power Electronics, Smart Grid and Renewable Energy (PESGRE2020), pp.1-6, IEEE, January 2020, 10.1109/PESGRE45664.2020.9070767

[12] S. K. Panda and A. Ghosh, ”A Computational Analysis of Interfacing Converters with Advanced Control Methodologies for Microgrid Application”, Technology and Economics of Smart Grids and Sustainable Energy, vol.5, no.1, pp.1-18, Springer 2020, 10.1007/s40866-020-0077-x

[13] H. Tiwari and A. Ghosh, ”Power Flow Control in Solar PV Fed DC Microgrid with Storage”, in 2020 IEEE 9th Power India International Conference (PIICON), IEEE 2020, 10.1109/PIICON49524.2020.9112962

[14] A. Ghosh and S. Banerjee, ”A Comparison between Classical and Advanced Controllers for a Boost Converter”, in 2018 IEEE International Conference on Power Electronics, Drives and Energy Systems (PEDES) 2018, 10.1109/PEDES.2018.8707911

[15] S. K. Panda and A. Ghosh, ”A Low Ripple Load Regulation Scheme for Grid Connected Microgrid Systems”, in 2018 IEEE 8th Power India International Conference (PIICON) 2018, 10.1109/POWERI.2018.8704358

[16] J. Meher and A. Ghosh, ”Comparative Study of DC/DC Bidirectional SEPIC Converter with Different Controllers”, in 2018 IEEE 8th Power India International Conference (PIICON) 2018, 10.1109/POWERI.2018.8704363

[17] S.K. Panda, and A. Ghosh, ”Design of a Model Predictive Controller for Grid Connected Microgrids” In International Journal of Power Electronics 2018.

[18] A. Ghosh, S. Banerjee, M. K. Sarkar, and P. Dutta, ”Design and implementation of type-II and type-III controller for DC–DC switched-mode boost converter by using K-factor approach and optimisation techniques”, IET Power Electronics, vol.9, no.5, pp.938-950, Institution of Engineering and Technology, April 2016, 10.1049/iet-pel.2015.0144

[19] A. Ghosh, S. Banerjee, and P. Dutta, ”Gravitational search algorithm based optimal type-II controller for DC-DC boost converter”, in Michael Faraday IET International Summit 2015, IEEE, Kolkata, India, September 2015, 10.1049/cp.2015.1661

[20] A. Ghosh and S. Banerjee, ”Control of switched-mode boost converter by using classical and optimized type controllers”, Journal of Control Engineering and Applied Informatics, vol.17, no.4, pp.114-125, Romanian Society of Control Engineering 2015

Authorized licensed use limited to: University of Saskatchewan. Downloaded on August 10,2021 at 09:08:20 UTC from IEEE Xplore. Restrictions apply.